RED HEAD®

# Trubolt+

# SUBMITTAL PACK

ICC ES

ICC-ESR 3772

CRACKED & UNCRACKED SEISMIC APPROVED

# Trubolt & Trubolt+ Wedge Anchor Part Number Guide

| NEW Next Generation Trubolt/Trubolt+ Carbon Steel Wedge Anchor | |
|---|---|
| **NEW ITW Trubolt/Trubolt+ Part No.** | **Part Description** |
| TB4C-1416 | Trubolt 1/4 x 1-3/4" Carbon Steel Wedge Anchor |
| TB4C-1422 | Trubolt+ 1/4 x 2-1/4" Carbon Steel Wedge Anchor |
| TB4C-1432 | Trubolt+ 1/4 x 3-1/4" Carbon Steel Wedge Anchor |
| TB4C-3822 | Trubolt 3/8 x 2-1/4" Carbon Steel Wedge Anchor |
| TB4C-3826 | Trubolt 3/8 x 2-3/4" Carbon Steel Wedge Anchor |
| TB4C-3830 | Trubolt+ 3/8 x 3" Carbon Steel Wedge Anchor |
| TB4C-3834-NEW | Trubolt+ 3/8 x 3-1/2" Carbon Steel Wedge Anchor |
| TB4C-3836 | Trubolt+ 3/8 x 3-3/4" Carbon Steel Wedge Anchor |
| TB4C-3850 | Trubolt+ 3/8 x 5" Carbon Steel Wedge Anchor |
| TB4C-3870 | Trubolt+ 3/8 x 7" Carbon Steel Wedge Anchor |
| TB4C-1226 | Trubolt 1/2 x 2-3/4" Carbon Steel Wedge Anchor |
| TB4C-1236 | Trubolt+ 1/2 x 3-3/4" Carbon Steel Wedge Anchor |
| TB4C-1242 | Trubolt+ 1/2 x 4-1/4" Carbon Steel Wedge Anchor |
| TB4C-1244 | Trubolt+ 1/2 x 4-1/2" Carbon Steel Wedge Anchor |
| TB4C-1254 | Trubolt+ 1/2 x 5-1/2" Carbon Steel Wedge Anchor |
| TB4C-1270 | Trubolt+ 1/2 x 7" Carbon Steel Wedge Anchor |
| TB4C-5834 | Trubolt 5/8 x 3-1/2" Carbon Steel Wedge Anchor |
| TB4C-5844-NEW | Trubolt+ 5/8 x 4-1/2" Carbon Steel Wedge Anchor |
| TB4C-5850 | Trubolt+ 5/8 x 5" Carbon Steel Wedge Anchor |
| TB4C-5860 | Trubolt+ 5/8 x 6" Carbon Steel Wedge Anchor |
| TB4C-5870 | Trubolt+ 5/8 x 7" Carbon Steel Wedge Anchor |
| TB4C-5884 | Trubolt+ 5/8 x 8-1/2" Carbon Steel Wedge Anchor |
| TB4C-58100 | Trubolt+ 5/8 x 10" Carbon Steel Wedge Anchor |
| TB4C-3442 | Trubolt 3/4 x 4-1/4" Carbon Steel Wedge Anchor |
| TB4C-3446 | Trubolt 3/4 x 4-3/4" Carbon Steel Wedge Anchor |
| TB4C-3454 | Trubolt+ 3/4 x 5-1/2" Carbon Steel Wedge Anchor |
| TB4C-3462 | Trubolt+ 3/4 x 6-1/4" Carbon Steel Wedge Anchor |
| TB4C-3470 | Trubolt+ 3/4 x 7" Carbon Steel Wedge Anchor |
| TB4C-3484 | Trubolt+ 3/4 x 8-1/2" Carbon Steel Wedge Anchor |
| TB4C-34100 | Trubolt+ 3/4 x 10" Carbon Steel Wedge Anchor |
| TB4C-34120 | Trubolt+ 3/4 x 12" Carbon Steel Wedge Anchor |
| TB4C-10060 | Trubolt+ 1 x 6" Carbon Steel Wedge Anchor |
| TB4C-10090 | Trubolt+ 1 x 9" Carbon Steel Wedge Anchor |
| TB4C-100120 | Trubolt+ 1 x 12" Carbon Steel Wedge Anchor |
| TB4C-11490-NEW | Trubolt+ 1-1/4" x 9" Carbon Steel Wedge Anchor |

© 2017 Illinois Tool Works, Inc. TB0317

ICC EVALUATION SERVICE

In Cooperation with Innovation RESEARCH LABS

*Most Widely Accepted and Trusted*

# ICC-ES Report

ICC-ES | (800) 423-6587 | (562) 699-0543 | www.icc-es.org

# ESR-3772

Reissued 10/2016

This report is subject to renewal 10/2017.

**DIVISION: 03 00 00—CONCRETE**

**SECTION: 03 16 00—CONCRETE ANCHORS**

**DIVISION: 05 00 00—METALS**

**SECTION: 05 05 19—POST-INSTALLED CONCRETE ANCHORS**

**REPORT HOLDER:**

## ITW RED HEAD

**700 HIGH GROVE BOULEVARD**
**GLENDALE HEIGHTS, ILLINOIS 60139**

**EVALUATION SUBJECT:**

## ITW RED HEAD CARBON STEEL TRUBOLT+ WEDGE ANCHORS FOR CRACKED AND UNCRACKED CONCRETE

**Look for the trusted marks of Conformity!**

*"2014 Recipient of Prestigious Western States Seismic Policy Council (WSSPC) Award in Excellence"*

A Subsidiary of INTERNATIONAL CODE COUNCIL

*ICC-ES Evaluation Reports are not to be construed as representing aesthetics or any other attributes not specifically addressed, nor are they to be construed as an endorsement of the subject of the report or a recommendation for its use. There is no warranty by ICC Evaluation Service, LLC, express or implied, as to any finding or other matter in this report, or as to any product covered by the report.*

Copyright © 2016 ICC Evaluation Service, LLC. All rights reserved.

# ICC-ES Evaluation Report

**ESR-3772**

*Reissued October 2016*
*Revised November 2016*
*This report is subject to renewal October 2017.*

www.icc-es.org | (800) 423-6587 | (562) 699-0543 *A Subsidiary of the International Code Council®*

**DIVISION: 03 00 00—CONCRETE**
**Section: 03 16 00—Concrete Anchors**

**DIVISION: 05 00 00—METALS**
**Section: 05 05 19—Post-installed Concrete Anchors**

**REPORT HOLDER:**

**ITW RED HEAD**
**700 HIGH GROVE BOULEVARD**
**GLENDALE HEIGHTS, ILLINOIS 60139**
**(800) 848-5611**
**www.itwredhead.com**
**techsupport@itwccna.com**

**ADDITIONAL LISTEE:**

**ITW BRANDS**
**955 NATIONAL PARKWAY, SUITE 95500**
**SCHAUMBURG, ILLINOIS 60173**
**(877) 489-2726**
**www.itwbrands.com**

**EVALUATION SUBJECT:**

**ITW RED HEAD CARBON STEEL TRUBOLT+ WEDGE ANCHORS FOR CRACKED AND UNCRACKED CONCRETE**

## 1.0 EVALUATION SCOPE

**Compliance with the following codes:**

- 2015, 2012, 2009, and 2006 *International Building Code®* (IBC)
- 2015, 2012, 2009, and 2006 *International Residential Code®* (IRC)

**Property evaluated:**

Structural

## 2.0 USES

The RED HEAD Trubolt+ Wedge Anchors with diameters of $^1/_4$-inch (6.4 mm), $^3/_8$-inch (9.5 mm), $^1/_2$-inch (12.7 mm), $^5/_8$-inch (15.9 mm), and $^3/_4$-inch (19.1 mm) are used to resist static, wind, and seismic tension and shear loads in cracked and uncracked normal-weight and sand-lightweight concrete having a specified compressive strength, $f'_c$, ranging from 2,500 psi to 8,500 psi (17.2 MPa to 58.6 MPa).

The Trubolt+ Wedge anchors comply with anchors as described in Section 1901.3 of the 2015 IBC, Section 1909 of the 2012 IBC, and Section 1912 of the 2009 and 2006 IBC. The anchors are alternatives to cast-in-place anchors described in Section 1908 of the 2012 IBC, and Section 1911 of the 2009 and 2006 IBC. The anchors may also be used where an engineered design is submitted in accordance with Section R301.1.3 of the IRC.

## 3.0 DESCRIPTION

### 3.1 RED HEAD Carbon Steel Trubolt+ Wedge Anchor:

The RED HEAD Trubolt+ Wedge Anchor is a torque-controlled, wedge-type mechanical expansion anchor, available in $^1/_4$-inch (6.4 mm), $^3/_8$-inch (9.5 mm), $^1/_2$-inch (12.7 mm), $^5/_8$-inch (15.9 mm) and $^3/_4$-inch (19.1 mm) diameters. The Trubolt+ Wedge Anchor consists of a high-strength threaded anchor body, expansion clip, hex nut and washer. The anchor body is manufactured from high strength carbon steel with mechanical properties (yield and ultimate strengths) as described in Tables 3 and 4 of this report. The zinc plating on the anchor body complies with ASTM B633 SC1, Type III, with a minimum 0.0002-inch (5 μm) thickness. The expansion clip is fabricated from carbon steel. The standard hexagonal steel nut conforms to ANSI B18.2.2-65 and the washer conforms to ANSI/ASME B18.22.1 1965 (R1981). The Trubolt+ Wedge anchor body consists of a threaded section throughout the majority of its length and a wedge section at the far end. The expansion clip is formed around the anchor, just above the wedge and consists of a split cylindrical ring. During torqueing of the anchor, the expansion clip is designed to grip the walls of the concrete hole as the wedge portion of the stud is forced upward against the interior of the clip (U.S. patent pending). The Trubolt+ Wedge anchor is illustrated in Figure 1 of this report.

### 3.2 Concrete:

Normal-weight and lightweight concrete must comply with Sections 1903 and 1905 of the IBC.

## 4.0 DESIGN AND INSTALLATION

### 4.1 Strength Design:

**4.1.1 General:** Design strength of anchors in accordance with the 2015 IBC, as well as Section R301.1.3 of the 2015 IRC must be determined in accordance with ACI 318-14 Chapter 17 and this report.

Design strength of anchors in accordance with the 2012 IBC, as well as Section R301.1.3 of the 2012 IRC, must be determined in accordance with ACI 318-11 Appendix D and this report.

*ICC-ES Evaluation Reports are not to be construed as representing aesthetics or any other attributes not specifically addressed, nor are they to be construed as an endorsement of the subject of the report or a recommendation for its use. There is no warranty by ICC Evaluation Service, LLC, express or implied, as to any finding or other matter in this report, or as to any product covered by the report.*

Copyright © 2016 ICC Evaluation Service, LLC. All rights reserved.

Design strength of anchors in accordance with the 2009 IBC and Section R301.1.3 of the 2009 IRC must be in accordance with ACI 318-08 Appendix D and this report.

Design strength of anchors in accordance with the 2006 IBC and Section R301.1.3 of the 2006 IRC must be in accordance with ACI 318-05 Appendix D and this report.

Design parameters and references to ACI 318 are based on the 2015 IBC (ACI 318-14) and on the 2012 IBC (ACI 318-11) unless noted otherwise in Sections 4.1.1 through 4.1.12 of this report. The strength design of anchors must comply with ACI 318-14 17.3.1 or ACI 318-11 D.4.1, as applicable, except as required in ACI 318-14 17.2.3 or ACI 318-11 D.3.3, as applicable. A design example in accordance with the 2012 IBC is provided in Figure 5 of this report.

Strength reduction factors, $\phi$, as given in ACI 318-14 17.3.3 or ACI 318-11 D.4.3 (ACI 318-08 and -05 D.4.4) must be used for load combinations calculated in accordance with Section 1605.2 of the IBC, Section 5.3 of ACI 318-14, and Section 9.2 of ACI 318-11, as applicable. Strength reduction factors, $\phi$, as given in ACI 318-11 D.4.4 (ACI 318-08 and -05 D.4.5) must be used for load combinations calculated in accordance with ACI 318-11, -08, and -05 Appendix C. The value of $f'_c$ used in calculations must be limited to 8,000 psi (55.2 MPa), maximum, in accordance with ACI 318-14 17.2.7 or ACI 318-11 D.3.7, as applicable. Strength reduction factors, $\phi$, corresponding to ductile steel elements may be used.

**4.1.2 Requirements for Static Steel Strength in Tension, $N_{sa}$:** The nominal static steel strength of a single anchor in tension, $N_{sa}$, calculated in accordance with ACI 318-14 17.4.1.2 or ACI 318-11 D.5.1.2, as applicable, is given in Table 3 of this report.

**4.1.3 Requirements for Static Concrete Breakout Strength in Tension, $N_{cb}$, $N_{cbg}$:** The nominal concrete breakout strength of a single anchor or a group of anchors in tension, $N_{cb}$ or $N_{cbg}$ respectively, must be calculated in accordance with ACI 318-14 17.4.2 or ACI 318-11 D.5.2, as applicable, with modifications as described in this section. The values of $f'_c$ used for calculation purposes must not exceed 8,000 psi (55.2 MPa). The basic concrete breakout strength of a single anchor in tension, $N_b$, must be calculated in accordance with ACI 318-14 17.4.2.2 or ACI 318-11 D.5.2.2, as applicable, using the values of $h_{ef}$ and $k_{cr}$ as given in Table 3 of this report. The nominal concrete breakout strength in tension in regions where analysis indicates no cracking in accordance with ACI 318-14 17.4.2.6 or ACI 318-11 D.5.2.6, as applicable, must be calculated with $\psi_{c,N}$ = 1.0 and using the value of $k_{uncr}$ as given in Table 3 of this report.

**4.1.4 Requirements for Static Pullout Strength in Tension, $N_{pn}$:** The nominal pullout strength of a single anchor in tension in accordance with ACI 318-14 17.4.3 or ACI 318-11 D.5.3, as applicable, in cracked and uncracked concrete, $N_{p,cr}$ or $N_{p,uncr}$, respectively, are given in Table 3 of this report, as applicable. In lieu of ACI 318-14 17.4.3.6 or ACI 318-11 D.5.3.6, as applicable, $\psi_{c,P}$ = 1.0 for all design cases. In accordance with ACI 318-14 17.4.3.2 or ACI 318-11 D.5.3.2, as applicable, the nominal pullout strength in cracked concrete must be adjusted by calculation according to Eq-1:

$$N_{pn,f'_c} = N_{p,cr}\left(\frac{f'_c}{2{,}500}\right)^n \text{ (lb, psi)} \qquad \text{(Eq-1)}$$

$$N_{pn,f'_c} = N_{p,cr}\left(\frac{f'_c}{17.2}\right)^n \text{ (N,MPa)}$$

where $f'_c$ is the specified concrete compressive strength and whereby the exponent $n$ = 0.4 for the $^1/_4$-inch (6.4 mm) anchor diameter.

In regions where analysis indicates no cracking in accordance with ACI 318-14 17.4.3.6 or ACI 318-11 D.5.3.6, as applicable, the nominal pullout strength in tension must be adjusted by calculation according to Eq-2:

$$N_{pn,f'_c} = N_{p,uncr}\left(\frac{f'_c}{2{,}500}\right)^n \text{ (lb, psi)} \qquad \text{(Eq-2)}$$

$$N_{pn,f'_c} = N_{p,uncr}\left(\frac{f'_c}{17.2}\right)^n \text{ (N,MPa)}$$

where $f'_c$ is the specified concrete compressive strength and whereby the exponent $n = {}^1/_2$ for all anchors.

Where values for $N_{p,cr}$ or $N_{p,uncr}$ are not provided in Table 3, the pullout strength in tension need not be evaluated.

**4.1.5 Requirements for Static Steel in Shear, $V_{sa}$:** The values of $V_{sa}$ for a single anchor given in Table 4 of this report must be used in lieu of the values of $V_{sa}$ derived by calculation according to ACI 318-14 17.5.1.2 or ACI 318 D.6.1.2, as applicable. The strength reduction factor, $\phi$, corresponding to a ductile steel element must be used for the Trubolt+ anchors as described in Table 4 of this report.

**4.1.6 Requirements for Static Concrete Breakout Strength in Shear, $V_{cb}$ or $V_{cbg}$:** The nominal static concrete breakout strength in shear of a single anchor or a group of anchors, $V_{cb}$ or $V_{cbg}$, respectively, must be calculated in accordance with ACI 318-14 17.5.2 or ACI 318-11 D.6.2, as applicable. The basic concrete breakout strength in shear of a single anchor in cracked concrete, $V_b$, must be calculated in accordance with ACI 318-14 17.5.2.2 or ACI 318-11 D.6.2.2, as applicable, using the value of $d_a$, given in Table 2 of this report, and the value $l_e$, given in Table 4. $l_e$ must be taken no greater than $h_{ef}$ and in no case must $l_e$ exceed $8d_a$.

**4.1.7 Requirements for Static Concrete Pryout Strength of Anchor in Shear, $V_{cp}$ or $V_{cpg}$:** The nominal static concrete pryout strength in shear of a single anchor or groups of anchors, $V_{cp}$ or $V_{cpg}$, must be calculated in accordance with ACI 318-14 17.5.3 or ACI 318-11 D.6.3, as applicable, modified by using the value of $k_{cp}$ provided in Table 4 of this report and the value of $N_{cb}$ or $N_{cbg}$ as calculated in Section 4.1.3 of this report.

**4.1.8 Requirements for Minimum Member Thickness, Minimum Anchor Spacing and Minimum Edge Distance:** Values of $s_{min}$ and $c_{min}$ as given in Table 2 of this report must be used in lieu of ACI 318-14 17.7.1 and 17.7.3, or ACI 318-11 D.8.1 and D.8.3, respectively, as applicable. Minimum member thicknesses, $h_{min}$, as given in Tables 2 through 4 of this report, must be used in lieu of ACI 318-14 17.7.5 or ACI 318-11 D.8.5, as applicable.

**4.1.9 Requirements for Critical Edge Distance and Splitting:** In applications where $c < c_{ac}$ and supplemental reinforcement to control splitting of the concrete is not present, the concrete breakout strength in tension for uncracked concrete, calculated according to ACI 318-14 17.4.2 or ACI 318-11 D.5.2, as applicable, must be further multiplied by the factor $\Psi_{cp,N}$ given by Eq-3:

$$\Psi_{cp,N} = c / c_{ac} \qquad \text{(Eq-3)}$$

whereby the factor $\Psi_{cp,N}$ need not be taken as less than $1.5h_{ef} / c_{ac}$. For all other cases $\Psi_{cp,N}$ = 1.0. In lieu of ACI 318-14 17.7.6 or ACI 318-11 D.8.6, as applicable, values for $c_{ac}$ must be taken from Table 3 of this report.

**4.1.10 Requirements for Seismic Design:**

**4.1.10.1 General:** For load combinations including earthquake, the design must be performed according to ACI 318-14 17.2.3 or ACI 318-11 D.3.3, as applicable. Modifications to ACI 318-14 17.2.3 shall be applied under Section 1905.1.8 of the 2015 IBC. For the 2012 IBC, Section 1905.1.9 is omitted. Modifications to ACI 318-08 and 318-05 D.3.3 must be applied under Section 1908.1.9 of the 2009 IBC or Section 1908.1.16 of the 2006 IBC, respectively, as applicable.

The Trubolt+ anchors comply with ACI 318-14 2.3 or ACI 318 (-11, -08, -05) D.1, as applicable, as ductile steel elements and must be designed in accordance with ACI 318-14 17.2.3.4, 17.2.3.5, 17.2.3.6 or 17.2.3.7; or ACI 318-11 D.3.3.4, D.3.3.5, D.3.3.6, or D.3.3.7; ACI 318-08 D.3.3.4, D.3.3.5, or D.3.3.6; or ACI 318-05 D.3.3.4 or D.3.3.5, as applicable.

**4.1.10.2 Seismic Tension:** The nominal steel strength and nominal concrete breakout strength for anchors in tension must be calculated according to ACI 318-14 17.4.1 and 17.4.2 or ACI 318-11 D.5.1 and D.5.2, respectively, as applicable, as described in Sections 4.1.2 and 4.1.3 of this report. Since there are no values for $N_{p,cr}$, $N_{p,uncr}$, or $N_{eq}$ in Table 3 of this report, the pullout strength in tension for seismic loads in accordance with ACI 318-14 17.4.3.2 or ACI 318-11 D.5.3.2, as applicable, does not govern and need not be evaluated.

**4.1.10.3 Seismic Shear:** The nominal concrete breakout strength and pryout strength for anchors in shear must be calculated according to ACI 318-14 17.5.2 and 17.5.3 or ACI 318-11 D.6.2 and D.6.3, respectively, as applicable, as described in Sections 4.1.6 and 4.1.7 of this report. In accordance with ACI 318-14 17.5.1.2 or ACI 318-11 D.6.1.2, as applicable, the value for nominal steel strength in shear for seismic loads, $V_{eq}$, given in Table 4 of this report, must be used in lieu of $V_{sa}$.

**4.1.11 Interaction of Tensile and Shear Forces:** For designs that include combined tension and shear, the interaction of tension and shear loads must be calculated in accordance with ACI 318-14 17.6 or ACI 318-11 D.7, as applicable.

**4.1.12 Lightweight Concrete:** For the use of anchors in lightweight concrete, the modification factor $\lambda_a$ equal to $0.8\lambda$ is applied to all values of $\sqrt{f'_c}$ affecting $N_n$ and $V_n$.

For ACI 318-14 (2015 IBC), ACI 318-11 (2012 IBC) and ACI 318-08 (2009 IBC), $\lambda$ shall be determined in accordance with the corresponding version of ACI 318.

For ACI 318-05 (2006 IBC), $\lambda$ shall be taken as 0.75 for all lightweight concrete and 0.85 for sand-lightweight concrete. Linear interpolation shall be permitted if partial sand replacement is used. In addition, the pullout strengths $N_{p,cr}$ , $N_{p,uncr}$, or $N_{p,eq}$ shall be multiplied by the modification factor $\lambda_a$, as applicable.

**4.2 Allowable Stress Design (ASD):**

**4.2.1 General:** For anchors designed using the allowable stress design load combinations in accordance with IBC Section 1605.3, allowable loads must be established using Eq-4 and Eq-5:

$$T_{allowable,ASD} = \phi N_n / \alpha \qquad \text{(Eq-4)}$$

and

$$V_{allowable,ASD} = \phi V_n / \alpha \qquad \text{(Eq-5)}$$

where

$T_{allowable,ASD}$ = Allowable tension load (lbf or kN).

$V_{allowable,ASD}$ = Allowable shear load (lbf or kN).

$\phi N_n$ = Lowest design strength of an anchor or anchor group in tension as determined in accordance with ACI 318-14 Chapter 17 and 2015 IBC Section 1905.1.8, ACI 318-11 Appendix D, ACI 318-08 Appendix D and 2009 IBC Section 1908.1.9, and ACI 318-05 Appendix D and 2006 IBC Section 1908.1.16, with amendments in Section 4.1 of this report, as applicable (lb or kN).

$\phi V_n$ = Lowest design strength of an anchor or anchor group in shear as determined in accordance with ACI 318-14 Chapter 17 and 2015 IBC Section 1905.1.8, ACI 318-11 Appendix D, ACI 318-08 Appendix D and 2009 IBC Section 1908.1.9, ACI 318-05 Appendix D and 2006 IBC Section 1908.1.16, and Section 4.1 of this report as applicable. (lb or kN).

$\alpha$ = Conversion factor calculated as a weighted average of the load factors for the controlling load combination. In addition, $\alpha$ must include all applicable factors to account for nonductile failure modes and required over-strength.

The requirements for member thickness, edge distance and spacing, as described in this report, must apply. An example of allowable stress design values for illustrative purposes is shown in Table 5 of this report.

**4.2.2 Interaction of Tensile and Shear Forces:** In lieu of ACI 318-14 17.6 or ACI 318-11 D.7.1, D.7.2 and D.7.3, interaction must be calculated as follows:

For shear loads $V \leq 0.2\ V_{allowable,\ ASD}$, the full allowable load in tension, $T_{allowable,\ ASD}$, may be taken.

For tension loads $T \leq 0.2\ T_{allowable,\ ASD}$, the full allowable load in shear, $V_{allowable,\ ASD}$, may be taken.

For all other cases, Eq-6 applies:

$$T/T_{allowable,\ ASD} + V/V_{allowable,\ ASD} \leq 1.2 \qquad \text{(Eq-6)}$$

**4.3 Installation:**

Installation parameters are provided in Table 2 and Figures 3 and 4 of this report. Anchor locations must comply with this report and the plans and specifications approved by the code official. The Trubolt+ Wedge Anchors must be installed according to ITW's published instructions and this report. Holes must be predrilled in concrete with a compressive strength from 2,500 to 8,500 psi (17.2 to 58.6 MPa) at time of installation, using carbide-tipped masonry drill bits manufactured within the range of the maximum and minimum drill tip dimensions of ANSI Standard B212.15-1994. The nominal drill bit diameter must be equal to that of the nominal anchor diameter. The minimum drilled hole depth, $h_o$, must comply with Table 2 of this report. Embedment, spacing, edge distance, and minimum concrete thickness must comply with Table 2. The predrilled holes must be cleaned to remove loose particles, using pressurized air or a vacuum. For the RED HEAD Trubolt+ Wedge Anchor, the hex nut and washer must be assembled on the end of the anchor, leaving the nut one-half turn from the end of the anchor to protect the anchor threads. The anchors must be hammered into the predrilled hole to the required embedment depth in

concrete. Where a fixture is installed, the anchors must be hammered through the fixture into the predrilled hole to the required embedment depth into the concrete. The nut must be tightened against the washer until the specified torque values listed in Table 2 are achieved.

### 4.4 Special Inspection:

Periodic special inspection is required, in accordance with Section 1705.1.1 and Table 1705.3 of the 2015 IBC and 2012 IBC; Section 1704.15 and Table 1704.4 of the 2009 IBC; or Section 1704.13 of the 2006 IBC. The special inspector must make periodic inspections during anchor installation to verify anchor type, anchor dimensions, concrete type, concrete compressive strength, drill bit type, hole dimensions, hole cleaning procedures, edge distance, anchor spacing, concrete member thickness, anchor embedment, tightening torque, and adherence to the manufacturer's published installation instructions. The special inspector must be present as often as required in accordance with the statement of special inspection. Under the IBC, additional requirements as set forth in Sections 1705, 1706, and 1707 must be observed, where applicable.

## 5.0 CONDITIONS OF USE

The Trubolt+ Wedge Anchors described in this report comply with, or are suitable alternatives to what is specified in, those codes listed in Section 1.0 of this report, subject to the following conditions.

**5.1** The anchors must be installed in accordance with ITW's published instructions and this report. In case of conflicts, this report governs.

**5.2** Anchor sizes, dimensions, and installation parameters are as set forth in this report.

**5.3** The anchors are limited to installation in cracked and uncracked, normal-weight or sand-lightweight concrete having a specified compressive strength, $f'_c$, of 2,500 psi to 8,500 psi (17.2 MPa to 58.6 MPa).

**5.4** The values of $f'_c$ used for calculation purposes must not exceed 8,000 psi (55.2 MPa).

**5.5** Strength design values must be established in accordance with Section 4.1 of this report.

**5.6** Allowable design values must be established in accordance with Section 4.2 of this report.

**5.7** Anchor spacing, edge distance, and minimum member thickness must comply with Table 2 of this report.

**5.8** Prior to installation, calculations and details justifying that the applied loads comply with this report must be submitted to the code official for approval. The calculations and details must be prepared by a registered design professional where required by the statutes of the jurisdiction in which the project is to be constructed.

**5.9** Since an ICC-ES acceptance criteria for evaluating data to determine the performance of expansion anchors subjected to fatigue or shock loading is unavailable at this time, the use of these anchors under such conditions is beyond the scope of this report.

**5.10** Anchors may be installed in regions of concrete where cracking has occurred or where analysis indicates cracking may occur ($f_t > f_r$), subject to the conditions of this report.

**5.11** Anchors may be used to resist short-term loading due to wind or seismic forces, subject to the conditions of this report.

**5.12** Where not otherwise prohibited in the code, Trubolt+ Wedge Anchors are permitted for use with fire-resistance-rated construction provided that at least one of the following conditions is fulfilled:

- Anchors are used to resist wind or seismic forces only.
- Anchors that support a fire-resistance-rated envelope or a fire-resistance-rated membrane are protected by approved fire-resistance-rated materials, or have been evaluated for resistance to fire exposure in accordance with recognized standards.
- Anchors are used to support nonstructural elements.

**5.13** Use of the zinc plated, carbon steel anchors is limited to dry, interior locations.

**5.14** Special inspections are provided in accordance with Section 4.4 of this report.

**5.15** The anchors are manufactured under an approved quality-control program with inspections by ICC-ES.

## 6.0 EVIDENCE SUBMITTED

Data complying with the ICC-ES Acceptance Criteria for Mechanical Anchors in Concrete Elements (AC193), dated June 2012, editorially revised October 2015, for use in cracked and uncracked concrete, including optional tests for seismic tension and shear; and quality control documentation.

## 7.0 IDENTIFICATION

The anchors are identified by their dimensional characteristics, and by a length identification marking stamped on the anchor head, as indicated in Table 1 and illustrated in Figure 2 of this report. The length identification marking on the anchor head is visible after installation for verification and includes a "+" symbol for those anchors meetring the overall anchor length requirements listed in Table 2. If a "+" symbol is not visible on the anchor head, the anchor does not meet the minimum overall anchor length requirements listed in Table 2. Packages are identified with the name of the anchor, material type and size; the manufacturer's name (ITW Commercial Construction North America or ITW Brands) and address; and the evaluation report number (ESR-3772).

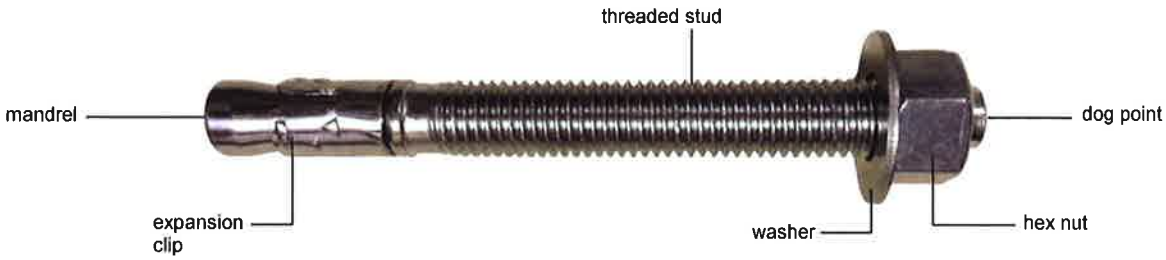


**FIGURE 1—RED HEAD TRUBOLT+ WEDGE ANCHOR**

**TABLE 1—LENGTH IDENTIFICATION MARKINGS[1]**

| LENGTH (inches) | ID MARKING ON ANCHOR HEAD | | | | | | | | | | | | | | | | | | | |
|---|---|---|---|---|---|---|---|---|---|---|---|---|---|---|---|---|---|---|---|---|
| | A+ | B+ | C+ | D+ | E+ | F+ | G+ | H+ | I+ | J+ | K+ | L+ | M+ | N+ | O+ | P+ | Q+ | R+ | S+ | T+ |
| From | $1^1/_2$ | 2 | $2^1/_2$ | 3 | $3^1/_2$ | 4 | $4^1/_2$ | 5 | $5^1/_2$ | 6 | $6^1/_2$ | 7 | $7^1/_2$ | 8 | $8^1/_2$ | 9 | $9^1/_2$ | 10 | 11 | 12 |
| Up to, but not including | 2 | $2^1/_2$ | 3 | $3^1/_2$ | 4 | $4^1/_2$ | 5 | $5^1/_2$ | 6 | $6^1/_2$ | 7 | $7^1/_2$ | 8 | $8^1/_2$ | 9 | $9^1/_2$ | 10 | 11 | 12 | 13 |

For **SI:** 1 inch = 25.4 mm.

[1]Figure 2 shows a typical marking.

**FIGURE 2—RED HEAD TRUBOLT+ WEDGE ANCHOR LENGTH IDENTIFICATION MARKING**

**TABLE 2—ITW RED HEAD TRUBOLT+ WEDGE ANCHOR INSTALLATION INFORMATION[1]**

| PARAMETER | NOTATION | UNITS | NOMINAL ANCHOR DIAMETER | | | | | | | | | | | | | |
|---|---|---|---|---|---|---|---|---|---|---|---|---|---|---|---|---|
| | | | $^1/_4$ | $^3/_8$ | | | $^1/_2$ | | | | $^5/_8$ | | | $^3/_4$ | | |
| Anchor outer diameter | $d_a[d_o]$[2] | in. | 0.250 | 0.375 | | | 0.500 | | | | 0.625 | | | 0.750 | | |
| Nominal carbide bit diameter | $d_{bit}$ | in. | $^1/_4$ | $^3/_8$ | | | $^1/_2$ | | | | $^5/_8$ | | | $^3/_4$ | | |
| Effective embedment depth | $h_{ef}$ | in. | $1^1/_2$ | $1^5/_8$ | | 2 | 2 | | $3^1/_4$ | | $2^3/_4$ | 4 | | $3^3/_4$ | | $4^3/_4$ |
| Nominal anchor embedment depth | $h_{nom}$ | in. | $1^3/_4$ | 2 | | $2^3/_8$ | $2^1/_2$ | | $3^3/_4$ | | $3^3/_8$ | $4^5/_8$ | | $4^1/_2$ | | $5^1/_2$ |
| Minimum hole depth | $h_o$ | in. | 2 | $2^1/_4$ | | $2^5/_8$ | $2^3/_4$ | | 4 | | $3^5/_8$ | $4^7/_8$ | | $4^3/_4$ | | $5^3/_4$ |
| Minimum concrete member thickness | $h_{min}$ | in. | 4 | 4 | 5 | 4 | 4 | 6 | 6 | 8 | 5 | 6 | 8 | 6 | 8 | 8 |
| Critical edge distance | $c_{ac}$ | in. | $3^1/_2$ | $3^1/_2$ | 3 | 4 | 4 | 3 | $6^3/_4$ | $5^3/_4$ | 8 | $8^3/_4$ | $6^3/_4$ | 10 | 8 | 9 |
| Minimum anchor spacing | $s_{min}$ | in. | $1^1/_2$ | $2^1/_2$ | | 2 | $2^1/_2$ | | 2 | | $3^1/_2$ | 3 | | $3^3/_4$ | | $3^3/_4$ |
| | for $c \geq$ | in. | 2 | 3 | | 3 | $4^1/_2$ | | $2^1/_2$ | | 5 | $4^1/_4$ | | 8 | | $7^1/_2$ |
| Minimum edge distance | $c_{min}$ | in. | $1^3/_4$ | 2 | | $1^3/_4$ | $2^1/_2$ | | $1^3/_4$ | | $3^1/_2$ | 3 | | $3^1/_2$ | | 4 |
| | for $s \geq$ | in. | 2 | 4 | | $4^1/_2$ | 4 | | $4^1/_2$ | | 6 | $5^1/_4$ | | 10 | | $8^3/_4$ |
| Minimum overall anchor length | $l_{anchor}$ | in. | $2^1/_4$ | 3 | | $3^1/_2$ | $3^3/_4$ | | $4^1/_2$ | | $4^1/_2$ | 6 | | $5^1/_2$ | | 7 |
| Installation torque | $T_{insl}$ | ft-lb | 8 | 25 | | | 45 | | | | 90 | | | 100 | | |
| Minimum diameter of hole in fastened part | $d_h$ | in. | $^3/_8$ | $^1/_2$ | | | $^5/_8$ | | | | $^3/_4$ | | | $^7/_8$ | | |

For **SI:** 1 inch = 25.4 mm, 1 ft-lb = 1.356 N-m.

[1]The information presented in this table is to be used in conjunction with the design criteria of ACI 318-14 Chapter 17 or ACI 318-11 Appendix D, as applicable.
[2]The notation in brackets is for the 2006 IBC.

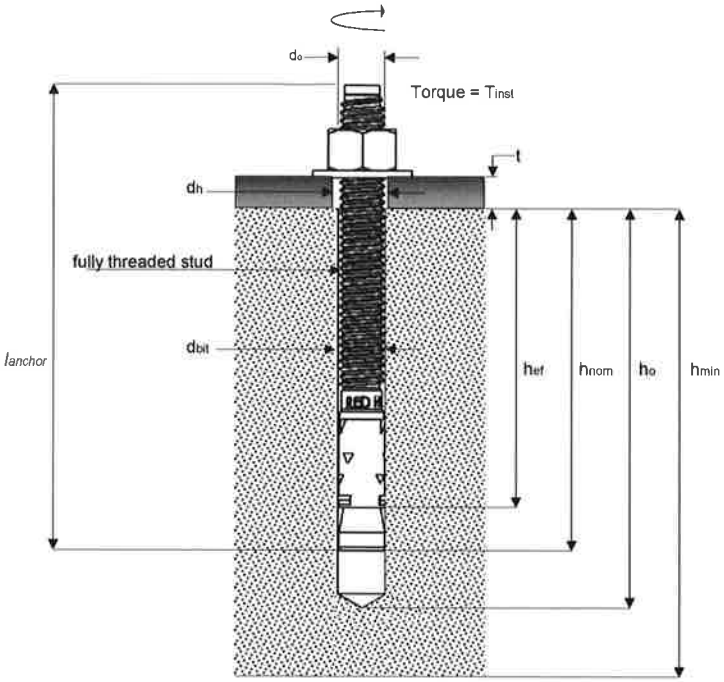


**FIGURE 3—ITW RED HEAD TRUBOLT+ WEDGE ANCHOR (INSTALLED)**

## MANUFACTURER'S INSTALLATION STEPS

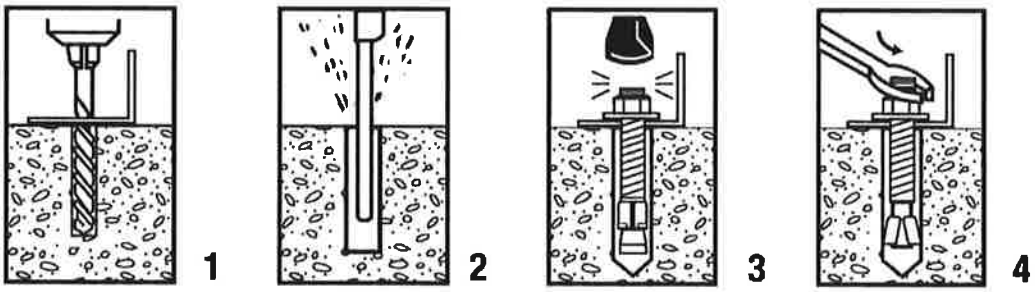


1. Select a carbide drill bit with a diameter equal to the nominal anchor diameter. Drill hole at least 1/4" deeper than nominal anchor embedment.
2. Clean hole with pressurized air or vacuum to remove any excess dust/debris.
3. Using the washer and nut provided, assemble the anchor, leaving nut one half turn from the end of anchor to protect threads. Drive anchor through fixture to the specified embedment. Fasten nut and washer flush to surface of fixture.
4. Expand anchor by tightening nut to the specified setting torque.

**FIGURE 4—INSTALLATION INSTRUCTIONS**

**TABLE 3—ITW RED HEAD TRUBOLT+ WEDGE ANCHOR TENSION DESIGN INFORMATION[1,2,3]**

| CHARACTERISTIC | SYMBOL | UNITS | NOMINAL ANCHOR DIAMETER (inch)[6] | | | | | | | | | | | | | |
|---|---|---|---|---|---|---|---|---|---|---|---|---|---|---|---|---|
| | | | 1/4 | 3/8 | | | 1/2 | | | | 5/8 | | | 3/4 | | |
| Anchor category | 1, 2 or 3 | — | 1 | 1 | | | 1 | | | | 1 | | | 1 | | |
| Minimum effective embedment depth | $h_{ef}$ | In. | 1 1/2 | 1 5/8 | | 2 | 2 | | 3 1/4 | | 2 3/4 | 4 | | 3 3/4 | | 4 3/4 |
| Minimum concrete member thickness | $h_{min}$ | In. | 4 | 4 | 5 | 4 | 4 | 6 | 6 | 8 | 5 | 6 | 8 | 6 | 8 | 8 |
| Critical edge distance | $c_{ac}$ | In. | 3 1/2 | 3 1/2 | 3 | 4 | 4 | 3 | 6 3/4 | 5 3/4 | 8 | 8 3/4 | 6 3/4 | 10 | 8 | 9 |
| **Data for Steel Strengths – Tension** | | | | | | | | | | | | | | | | |
| Minimum specified yield strength | $f_y$ | psi | 90,000 | 90,000 | | | 80,000 | | | | 80,000 | | | 80,000 | | |
| Minimum specified ultimate strength | $f_{uta}$ | psi | 120,000 | 120,000 | | | 100,000 | | | | 105,000 | | | 105,000 | | |
| Effective tensile stress area (neck) | $A_{se,N}$ [$A_{se}$][6] | in$^2$ | 0.029 | 0.056 | | | 0.110 | | | | 0.168 | | | 0.250 | | |
| Steel strength in tension | $N_{sa}$ | lbf | 3,480 | 6,720 | | | 11,000 | | | | 17,640 | | | 26,250 | | |
| Strength reduction factor $\phi$ for tension, steel failure modes[4] | $\phi$ | — | 0.75 | 0.75 | | | 0.75 | | | | 0.75 | | | 0.75 | | |
| **Data for Concrete Breakout Strengths in Tension** | | | | | | | | | | | | | | | | |
| Effectiveness factor - uncracked concrete | $k_{uncr}$ | — | 24 | 24 | | | 24 | | | | 24 | | | 27 | | 24 |
| Effectiveness factor - cracked concrete | $k_{cr}$ | — | 17 | 17 | | | 17 | | | | 17 | | | 21 | | |
| Modification factor for cracked and uncracked concrete[5] | $\Psi_{c,N}$ | — | 1.0 | 1.0 | | | 1.0 | | | | 1.0 | | | 1.0 | | |
| Strength reduction factor $\phi$ for tension, concrete failure modes, Condition B[4] | $\phi$ | — | 0.65 | 0.65 | | | 0.65 | | | | 0.65 | | | 0.65 | | |
| **Data for Pullout Strengths** | | | | | | | | | | | | | | | | |
| Pullout strength, uncracked concrete | $N_{p,uncr}$ | lbf | 2,025 | Pullout does not control[7] | | | Pullout does not control[7] | | | | Pullout does not control[7] | | | Pullout does not control[7] | | |
| Pullout strength, cracked concrete | $N_{p,cr}$ | lbf | 735 | Pullout does not control[7] | | | Pullout does not control[7] | | | | Pullout does not control[7] | | | Pullout does not control[7] | | |
| Pullout strength for seismic loads | $N_{eq}$ | lbf | 735 | Pullout does not control[7] | | | Pullout does not control[7] | | | | Pullout does not control[7] | | | Pullout does not control[7] | | |
| Strength reduction factor $\phi$ for tension, pullout failure modes, Condition B[4] | $\phi$ | — | 0.65 | Pullout does not control[7] | | | Pullout does not control[7] | | | | Pullout does not control[7] | | | Pullout does not control[7] | | |
| **Additional Anchor Data** | | | | | | | | | | | | | | | | |
| Axial stiffness in service load range in uncracked concrete | $\beta_{uncr}$ | lbf /in | 320,000 | 1,200,000 | | | | | | | | | | | | |
| Axial stiffness in service load range in cracked concrete | $\beta_{cr}$ | lbf /in | 230,000 | 70,000 | | | 95,000 | | | | 185,000 | | | 275,000 | | |

For **SI:** 1 inch = 25.4 mm, 1 in$^2$ = 645.16 mm$^2$, 1 lbf = 4.45 N, 1 psi = 0.006895 MPa, 1 lbf · 10$^2$/in = 17,500 N/m.

[1]The data in this table is intended to be used with the design provisions of ACI 318-14 Chapter 17 or ACI 318-11 Appendix D, as applicable; for anchors resisting seismic load combinations, the additional requirements of ACI 318-14 17.2.3 or ACI 318 D.3.3, as applicable, shall apply.
[2]Installation must comply with the manufacturers printed installation instructions and details, and this report.
[3]The 1/4-, 3/8-, 1/2-, 5/8-, and 3/4-inch diameter Trubolt + Wedge Anchors are ductile steel elements as defined by ACI 318-14 2.3 or ACI 318-11 D.1, as applicable.
[4]All values of $\phi$ apply to the load combinations of IBC Section 1605.2, ACI 318-14 Section 5.3, or ACI 318-11 Section 9.2, as applicable. If the load combinations of ACI 318-11 Appendix C are used, then the appropriate value of $\phi$ must be determined in accordance with ACI 318-11 D.4.4(c) (ACI 318-08 and -05 D.4.5(c)), as applicable. For installations where reinforcement that complies with ACI 318-14 Chapter 17 or ACI 318-11 Appendix D, as applicable, requirements for Condition A is present, the appropriate $\phi$ factor must be determined in accordance with ACI 318-14 17.3.3(c) or ACI 318-11 D.4.3(c) (ACI 318-08 and -05 D.4.4(c)), as applicable.
[5]For all design cases $\Psi_{c,N}$ = 1.0. The appropriate effectiveness factor for cracked concrete ($k_{cr}$) or uncracked concrete ($k_{uncr}$) must be used.
[6]The notation in brackets is for the 2006 IBC
[7]Anchor pullout strength does not control anchor design. Determine steel and concrete breakout capacities only.

**TABLE 4—RED HEAD TRUBOLT+ WEDGE ANCHOR SHEAR DESIGN INFORMATION[1,2,3]**

| CHARACTERISTIC | SYMBOL | UNITS | NOMINAL ANCHOR DIAMETER (inch)[5] | | | | | | | | | | | | | |
|---|---|---|---|---|---|---|---|---|---|---|---|---|---|---|---|---|
| | | | 1/4 | 3/8 | | | 1/2 | | | | 5/8 | | | 3/4 | | |
| Anchor category | 1, 2 or 3 | — | 1 | 1 | | | 1 | | | | 1 | | | 1 | | |
| Minimum effective embedment depth | $h_{ef}$ | in. | 1 1/2 | 1 5/8 | | 2 | 2 | | 3 1/4 | | 2 3/4 | 4 | | 3 3/4 | | 4 3/4 |
| Minimum concrete member thickness | $h_{min}$ | in. | 4 | 4 | 5 | 4 | 4 | 6 | 6 | 8 | 5 | 6 | 8 | 6 | 8 | 8 |
| Critical edge distance | $c_{ac}$ | in. | 3 1/2 | 3 1/2 | 3 | 4 | 4 | 3 | 6 3/4 | 5 3/4 | 8 | 8 3/4 | 6 3/4 | 10 | 8 | 9 |
| **Data for Steel Strengths – Shear** | | | | | | | | | | | | | | | | |
| Minimum specified yield strength | $f_y$ | psi | 90,000 | 90,000 | | | 80,000 | | | | 80,000 | | | 80,000 | | |
| Minimum specified ultimate strength | $f_{uta}$ | psi | 120,000 | 120,000 | | | 100,000 | | | | 105,000 | | | 105,000 | | |
| Effective shear stress area (thread) | $A_{se,V}$ [$A_{se}$][6] | in$^2$ | 0.035 | 0.075 | | | 0.142 | | | | 0.217 | | | 0.332 | | |
| Steel strength in shear, uncracked or cracked concrete[5] | $V_{sa}$ | lbf | 1,240 | 3,720 | | | 6,145 | | | | 9,040 | | | 15,990 | | |
| Steel strength in shear -seismic loads | $V_{eq}$ | lbf | 1,240 | 3,000 | | | 6,145 | | | | 9,040 | | | 14,730 | | |
| Strength reduction factor $\phi$ for shear, steel failure modes[4] | $\phi$ | — | 0.65 | 0.65 | | | 0.65 | | | | 0.65 | | | 0.65 | | |
| **Data for Concrete Breakout and Concrete Pryout Strengths – Shear** | | | | | | | | | | | | | | | | |
| Coefficient for pryout strength | $k_{cp}$ | — | 1.0 | 1.0 | | | 1.0 | | 2.0 | | 2.0 | | | 2.0 | | |
| Load-bearing length of anchor | $l_e$ | in | 1 1/2 | 1 5/8 | | 2 | 2 | | 3 1/4 | | 2 3/4 | 4 | | 3 3/4 | | 4 3/4 |
| Strength reduction factor $\phi$ for shear, concrete failure modes, Condition B[4] | $\phi$ | — | 0.70 | 0.70 | | | 0.70 | | | | 0.70 | | | 0.70 | | |

For **SI:** 1 inch = 25.4 mm, 1 in$^2$ = 645.16 mm$^2$, 1 lbf = 4.45 N, 1 psi = 0.006895 MPa, 1 lbf · 10$^2$/in = 17,500 N/m.

[1]The data in this table is intended to be used with the design provisions of ACI 318-14 Chapter 17 or ACI 318-11 Appendix D, as applicable; for anchors resisting seismic load combinations, the additional requirements of ACI 318-14 17.2.3 or ACI 318 D.3.3 shall apply, as applicable.
[2]Installation must comply with the manufacturers printed installation instructions and details.
[3]The 1/4-, 3/8-, 1/2-, 5/8-, and 3/4-inch diameter Trubolt + Wedge Anchors are ductile steel elements as defined by ACI 318-14 2.3 or ACI 318 D.1, as applicable.
[4]All values of $\phi$ apply to the load combinations of IBC Section 1605.2, ACI 318-14 Section 5.3, or ACI 318 Section 9.2, as applicable. If the load combinations of ACI 318-11 Appendix C are used, then the appropriate value of $\phi$ must be determined in accordance with ACI 318-11 D.4.4(c) (ACI 318-08 and -05 D.4.5(c)), as applicable. For installations where reinforcement that complies with ACI 318-14 Chapter 17 or ACI 318-11 Appendix D, as applicable, requirements for Condition A is present, the appropriate $\phi$ factor must be determined in accordance with ACI 318-14 17.3.3(c), ACI 318-11 D.4.3(c), or (ACI 318-08 and -05 D.4.4(c)), as applicable.
[5]Steel strength in shear values are based on test results per ACI 355.2-07, Section 9.4 and must be used for design.
[6]The notation in brackets is for the 2006 IBC.

**TABLE 5—EXAMPLE RED HEAD TRUBOLT+ WEDGE ANCHOR ALLOWABLE STRESS DESIGN (ASD) VALUES FOR ILLUSTRATIVE PURPOSES[1,2,3,4,5,6,7,8,9]**

| ANCHOR NOTATION | NOMINAL ANCHOR EMBEDMENT DEPTH (in), $h_{nom}$ | EFFECTIVE EMBEDMENT DEPTH (in), $h_{ef}$ | ALLOWABLE TENSION LOAD f'c = 2,500 psi (normal-weight concrete) (lb) |
|---|---|---|---|
| $^1/_4$ | $1^3/_4$ | $1^1/_2$ | 889 |
| $^3/_8$ | 2 | $1^5/_8$ | 1,090 |
| | $2^3/_8$ | 2 | 1,490 |
| $^1/_2$ | $2^1/_2$ | 2 | 1,490 |
| | $3^3/_4$ | $3^1/_4$ | 3,090 |
| $^5/_8$ | $3^3/_8$ | $2^3/_4$ | 2,405 |
| | $4^5/_8$ | 4 | 4,215 |
| $^3/_4$ | $4^3/_8$ | $3^3/_4$ | 4,305 |
| | $5^3/_8$ | $4^3/_4$ | 5,455 |

For **SI:** 1 inch = 25.4 mm, 1 lbf = 4.45 N.

**Design assumptions:**

[1]Single anchor with static tension load only.
[2]Concrete determined to remain uncracked for the life of the anchorage.
[3]Load combinations are in accordance with ACI 318-14 Section 5.3 or ACI 318-11 Section 9.2, as applicable, and no seismic loading.
[4]Thirty percent dead load and 70 percent live load, controlling load combination $1.2D + 1.6L$.
[5]Calculation of weighted average for α: $1.2D + 1.6L = 1.2(0.3) + 1.6(0.7) = 1.48$.
[6]$f'_c$ = 2,500 psi (normal-weight concrete).
[7]$c_{a1} = c_{a2} > = c_{ac}$.
[8]$h \geq h_{min}$.
[9]Values are for Condition B where supplementary reinforcement in accordance with ACI 318-14 17.3.3(c) or ACI 318-11 D.4.3(c), as applicable, is not provided.

**Illustrative Procedure to Calculate Allowable Stress Design Tension Value:**

RED HEAD Trubolt+ Wedge Anchor $^1/_2$ inch diameter using an effective embedment of $3^1/_4$ inches, assuming the given conditions in Table 5, in accordance with ACI 318-11 Appendix D and this report.

| | PROCEDURE | | CALCULATION |
|---|---|---|---|
| Step 1 | Calculate steel strength of a single anchor in tension per ACI 318-11 D.5.1.2 and Table 3 of this report | $\phi N_{sa}$ | $= \phi N_{sa}$<br>=0.75*11,000<br>**=8,250 lb (steel strength)** |
| Step 2 | Calculate concrete breakout strength of a single anchor in tension per ACI 318-11 D.5.2.1 and Table 3 of this report | $N_b$ | $= k_{uncr} * \lambda_a * \sqrt{f'_c} * h_{ef}{}^{1.5}$<br>$= 24 * 1.0 * \sqrt{2{,}500} * 3.25^{1.5}$<br>= 7,031 lbs |
| | | $\phi N_{cb}$ | $=\phi A_{NC}/A_{NC0}\, \psi_{ed,N}\, \psi_{c,N}\, \psi_{cp,N}\, N_b$<br>= 0.65*(95/95)*1.0*1.0*1.0*7,031<br>= 0.65*7,031<br>**= 4,570 lb (concrete breakout strength)** |
| Step 3 | Calculate pullout strength in tension per ACI 318-11 D.5.3.2 and Table 3 of this report | $\phi N_{pn}$ | $= \phi N_{p,uncr}\, \psi_{c,P}\, (f'_{c,actual}/2{,}500)^n$<br>= See Table 3, Footnote 7<br>**= pullout strength does not control and need not be calculated** |
| Step 4 | Determine controlling resistance strength in tension per ACI 318 D 4.1.1 | | **= 4,570 lb (controlling resistance)** |
| Step 5 | Calculate allowable stress design conversion factor for loading condition per ACI 318-11 Section 9.2: | α | $=1.2D + 1.6L$<br>$=1.2(0.3) + 1.6(0.7)$<br>**=1.48** |
| Step 6 | Calculate allowable stress design value per Section 4.2 of this report | $T_{allowable,ASD}$ | $= \phi N_n / \alpha$<br>= 4,570 / 1.48<br>**= 3,090 lb (allowable stress design)** |

**FIGURE 5—DESIGN EXAMPLE**

# ICC-ES Evaluation Report

# ESR-3772 FBC Supplement

*Reissued October 2016*
*Revised November 2016*
*This report is subject to renewal October 2017.*

www.icc-es.org | (800) 423-6587 | (562) 699-0543 *A Subsidiary of the International Code Council®*

**DIVISION: 03 00 00—CONCRETE**
**Section: 03 16 00—Concrete Anchors**

**DIVISION: 05 00 00—METALS**
**Section: 05 05 19—Post-Installed Concrete Anchors**

**REPORT HOLDER:**

**ITW RED HEAD**
**700 HIGH GROVE BOULEVARD**
**GLENDALE HEIGHTS, ILLINOIS 60139**
**(800) 848-5611**
**www.itwredhead.com**
**techsupport@itwccna.com**

**EVALUATION SUBJECT:**

**ITW RED HEAD CARBON STEEL TRUBOLT+ WEDGE ANCHORS FOR CRACKED AND UNCRACKED CONCRETE**

## 1.0 REPORT PURPOSE AND SCOPE

**Purpose:**

The purpose of this evaluation report supplement is to indicate that the RED HEAD Trubolt+ Wedge Anchors, recognized in ICC-ES master evaluation report ESR-3772, have also been evaluated for compliance with the codes noted below.

**Applicable code editions:**

- 2014 *Florida Building Code—Building*
- 2014 *Florida Building Code—Residential*

## 2.0 CONCLUSIONS

The RED HEAD Trubolt+ Wedge Anchors in uncracked and cracked concrete, described in master evaluation report ESR-3772, comply with the 2014 *Florida Building Code—Building* and the 2014 *Florida Building Code—Residential*, when designed and installed in accordance with the 2012 *International Building Code®* provisions noted in the master report, and under the following conditions:

- Design wind loads must be based on Section 1609 of the 2014 *Florida Building Code—Building* or Section 301.2.1.1 of the 2014 *Florida Building Code—Residential*, as applicable.
- Load combinations must be in accordance with Section 1605.2 or Section 1605.3 of the 2014 *Florida Building Code—Building*, as applicable.

Use of the RED HEAD Trubolt+ Wedge Anchors in uncracked and cracked concrete, for compliance with the High-Velocity Hurricane Zone Provisions of the 2014 *Florida Building Code—Building* and 2014 *Florida Building Code—Residential,* has not been evaluated and is outside the scope of this supplement.

For products falling under Florida Rule 9N-3, verification that the report holder's quality-assurance program is audited by a quality-assurance entity approved by the Florida Building Commission for the type of inspections being conducted is the responsibility of an approved validation entity (or the code official when the report holder does not possess an approval by the Commission).

This supplement expires concurrently with the master report, reissued October 2016 and revised November 2016.

*ICC-ES Evaluation Reports are not to be construed as representing aesthetics or any other attributes not specifically addressed, nor are they to be construed as an endorsement of the subject of the report or a recommendation for its use. There is no warranty by ICC Evaluation Service, LLC, express or implied, as to any finding or other matter in this report, or as to any product covered by the report.*

Copyright © 2016 ICC Evaluation Service, LLC. All rights reserved.